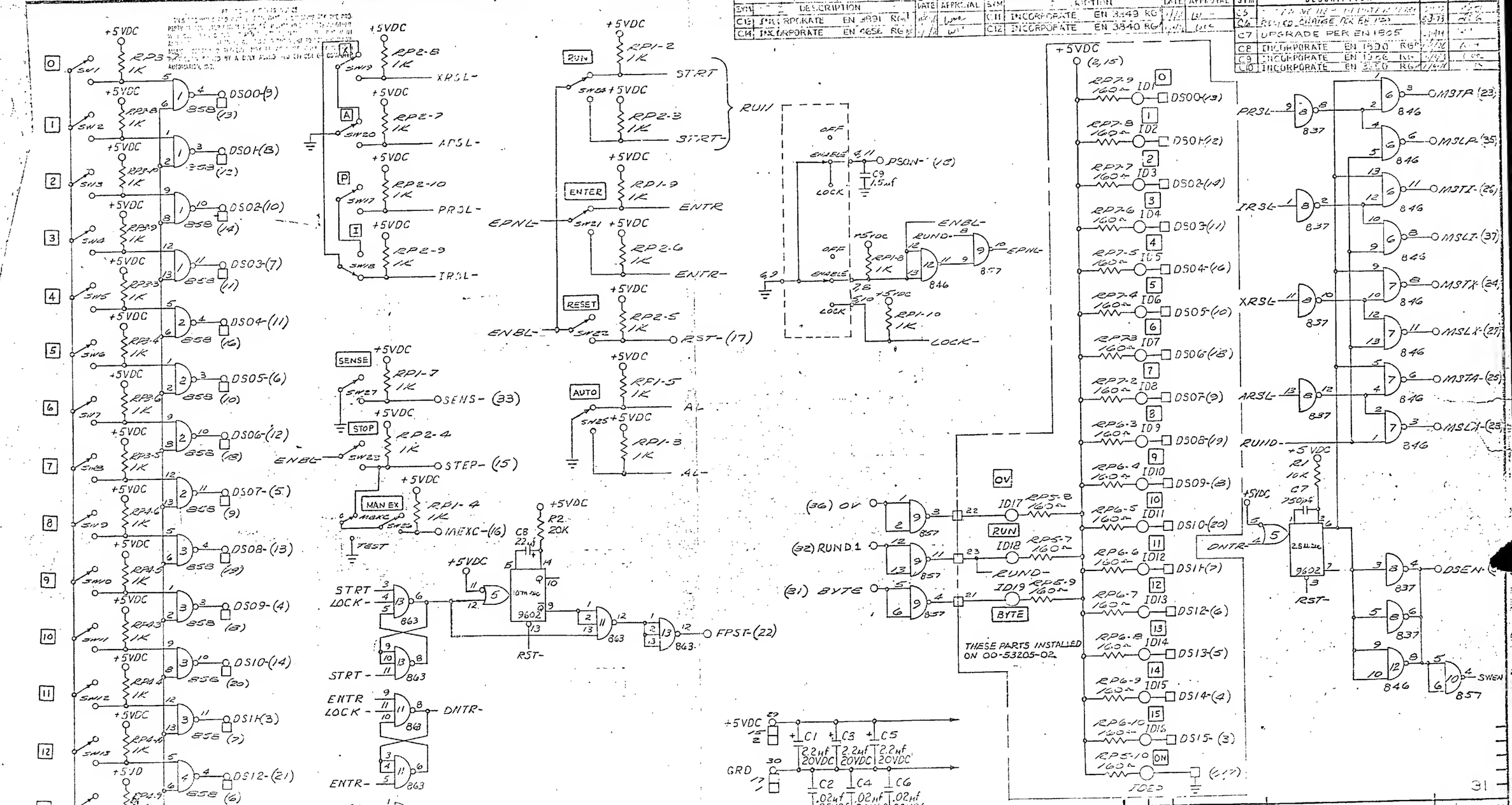

REVISIONS			
SYM	DESCRIPTION	DATE	APPROVAL
C13	INCORPORATE EN 3891 RG		
C14	INCORPORATE EN 4656 RG		

REVISIONS			
SYM	DESCRIPTION	DATE	APPROVAL
C11	INCORPORATE EN 3849 RG		
C12	INCORPORATE EN 3840 RG		

REVISIONS			
SYM	DESCRIPTION	DATE	APPROVAL
C5	[illegible]		
C6	REVISED CHANGE PER EN 1[illegible]	5-3-73	
C7	UPGRADE PER EN 1805		
C8	INCORPORATE EN 1890 RG		
C9	INCORPORATE EN 1986 RG		
C10	INCORPORATE EN 3[illegible] RG		

QTY	ITEM NO.	PART NO.	DESCRIPTION	MAT'L., VENDOR

LIST OF MATERIAL

COMPUTER AUTOMATION INC.

DR. [illegible]
CHK.
DSG.
ENGR.
PROJ
REL.

TOLERANCES
.X = ± .1
.XX = ± .03
.XXX = ± .010

ALL HOLE DIAMETERS ARE AFTER PLATING

DASH NO.	NEXT ASSY	QTY REQD

Alpha 16 Front Panel

SIZE D

SCALE =

SHT. 1 OF 1

31